swepac

FOR A SOLID GROUND

FB155 / FB240

USER MANUAL IN ORIGINAL

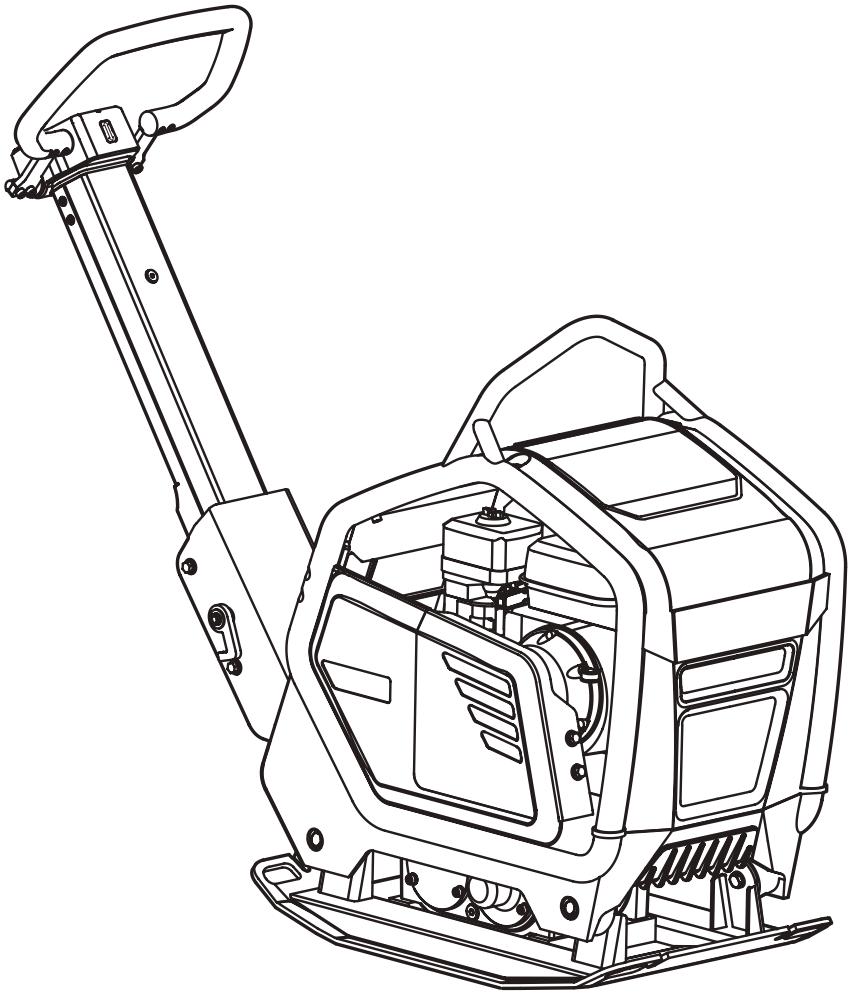

Dok: 101536-GB 2039

USE

SWEPAC FB 155 / FB 240
is used to pack ballast under foundations, roadwork construction, in pipe and cable trenches, etc. Due to the forward / reverse function, the machine is highly suited for packing ballast in places with poor access and as a complement to larger packing equipment in hard-to-reach places.

CONTENTS

USE....2
SAFETY INSTRUCTIONS....3
STANDARDS....3
SIGNS....4
TECHNICAL DATA....5
METHOD OF OPERATION....5
DAILY SUPERVISION....7

BEFORE STARTING....7
STARTING....7
AFTER STARTING....8
STOPPING....8

DRIVING INSTRUCTIONS....9
TRANSPORTATION....10
EC DECLARATION OF CONFORMITY....11

Dok: 101536-GB 2039

Bergvägen 7 | SE-341 32 Ljungby | Sweden • Tel +46 (0)372-156 00 | www.swepac.com

SAFETY INSTRUCTIONS

- Before using the machine, the operator must be informed of the manufacturer's safety instructions and instructions for use.
- The machine may only be used outdoors.
- The machine may not be used if protection and safety devices are not present or not working.
- The operator may not leave the machine unattended when the engine is on. When the vibrator is connected, the operator must be able to control the movement of the machine using the operating lever and the start/stop controls. The machine may only be operated by a trained operator.
- During maintenance work or other interventions in the machine, the engine must always be off.
- Switch the engine off before adding fuel. Avoid fuel spillage and immediately wipe off any spilled fuel. Add fuel only in well ventilated areas.
- Avoid touching hot engine parts, for example the silencer.
- Before lifting the machine, check that the lifting device and its mounting are not damaged and that the rubber dampers on the base plate are undamaged and tightened.
- During transportation and storage, the fuel tank should be empty and the fuel cock switched off.
- When the machine is parked, ensure that it cannot tip over. The machine must not incline more than 20º.
- The operator must use ear protectors when working with the machine.
- The operator must ensure that no unauthorised persons are in the immediate vicinity of the machine.
- Always wear personal protective equipment as heavy, non-slip shoes, ear protectors and approved eye protection.
- The machine may not be used in environments with potential fire or explosion danger.
- Never use the machine if you are tired or have consumed alcohol or are using medication that could affect your vision, your discretion or your coordination ability.
- Never use a machine that, in any way, has been changed from its original design.

STANDARDS

Noise

Measurement according to the standard EN 500-4 Rev.1: 1998, Annex C:
Measurement uncertainty ± 0,5dB (A) i 95% of measurements.
In accordance with the conditions in Directive 2000/14/EC, Annex VI, the following values are reported: As the sound pressure level at the operator's ears exceeds 80 dB (A), ear protectors must be used during operation!

	FB 155	FB240
Sound pressure level at the operator's ears, LpA	91 dB (A)	91 dB (A)
Permitted sound power level, L_{wa}	105 dB (A)	105 dB (A)
Guaranteed sound power level, L_{wa}	105 dB (A)	108 dB (A)

Hand/arm vibration

Vibration acceleration has been measured according to the ISO 5349 standard when driving on macadam substrates. The measured values have been converted to maximum daily exposure during regular use. Further information is available in the work environment regulations AFS 2005:15 on vibration, valid from 1 July 2005. Measurement uncertainty ± 0,3 m/s^2 in 95% of measurements.

	FB 155	FB 240
Hand/arm vibrations m/s2	2.5	2.5
Maximum daily exposure time	8h	8h

Exhaust Emissions

FB 155 and FB 240 meet the requirements for exhaust emissions in accordance with EU Stage V.

Additional information

Environmentally approved for use in large cities.

Dok:101536-GB 2039

SIGNS

Warning Signs

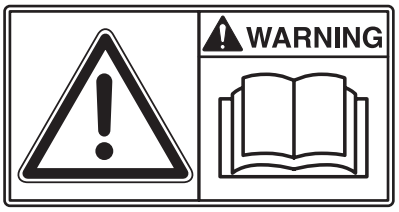

Before use, carefully read the manual and its safety instructions so that you can handle the machine safely. Ensure that the manual is always accessible.

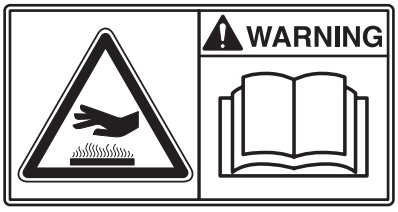

Engine and silencer: to avoid burns or discomfort, do not touch hot engine parts when the engine is on or when the machine has recently been used.

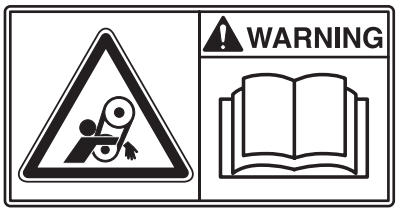

Belt drive: Keep hands, tools and other objects away from the belt drive when the machine is on to avoid injury and damage. See the safety instructions in the manual.

As the sound pressure level at the operator's ears exceeds 80 dB (A), ear protectors must be used when working with the machine to prevent hearing damage.

Machine Signs

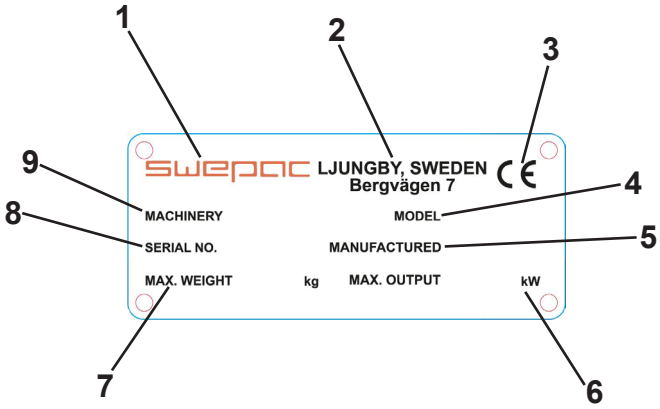

1. Manufacturer
2. Place, country of manufacture.
3. CE mark.
4. Model name.
5. Year of manufacture.
6. Max. engine power.
7. Max. weight.
8. Serial number.
9. Machine type

Dok:101536-GB 2039

TECHNICAL DATA

FB 155

Net weight .....180 kg
Base plate W x L .....450 x 790 mm
Operational speed approximately .....ca 25 m/min
Permitted inclination .....20°
Centrifugal force .....32000 N
Vibration frequency .....83 Hz
Driving engine .....Honda GX 200
Engine power .....4.1 kW
Engine RPM .....3400 RPM
Fuel tank volume .....3.6 litre
Fuel type .....Unleaded or alkylate petrol

FB 240

Net weight .....240 kg
Base plate W x L .....500 x 790 mm
Operational speed approximately .....ca 25 m/min
Permitted inclination .....20°
Centrifugal force .....38,000 N
Vibration frequency .....78 Hz
Driving engine .....Honda GX 200
Engine power .....4.1 kW
Engine RPM..... ..3400 RPM
Fuel tank volume .....3.6 litre
Fuel type .....Unleaded or alkylate petrol

METHOD OF OPERATION

The machine consists of a base plate with vibrating elements and a top-mounted suspended plate. The cushioning between the base plate and the upper part consists of rubber dampers. The power is transmitted from the engine to the vibration element via a V-belt which can be adjusted with a belt tensioner. The engine V-belt pulley is fitted with an integrated centrifugal clutch, which allows the engine to be started and run idle without the vibrator being connected. The engine is well protected against damage in connection with use and transportation by a sturdy protective frame with a protective panel.

OIL and FUEL RECOMMENDATIONS

Fuel	Unleaded or alkylate gasoline
Engine oil	SAE10W-30
Oil quantity, crankcase	0.5 litre
Engine oil change	First oil change after 50 hours then every 200 hours of operation. Change filter each time.
Vibrating element, oil/amount	SAE10W-30 FB 155.....0.19 litre FB 240.....0.35 litre

Dok:101536-GB 2039

TECHNICAL DESCRIPTION

FB 155 / FB 240

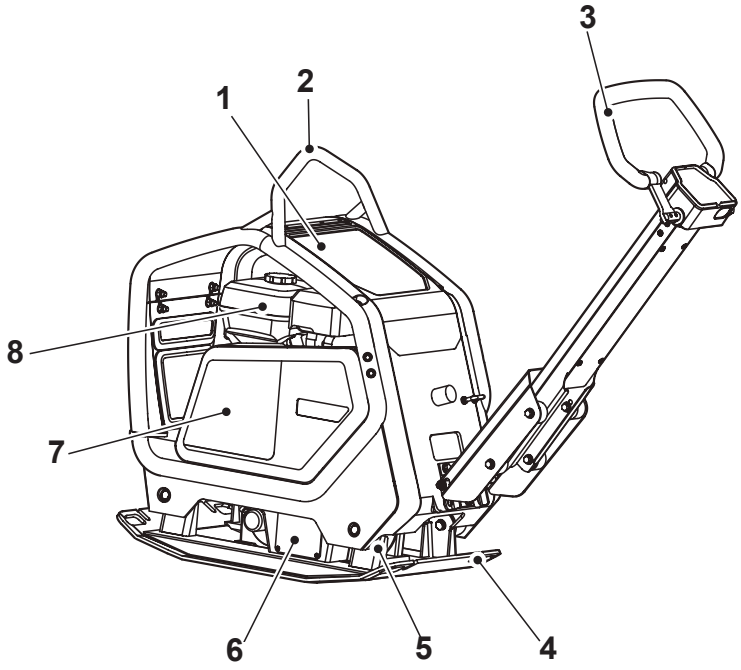

Lever view FB 240

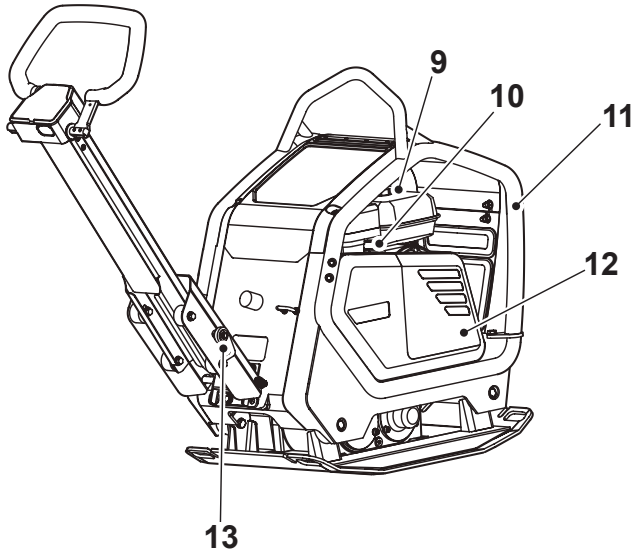

Lever view FB 155 / FB240

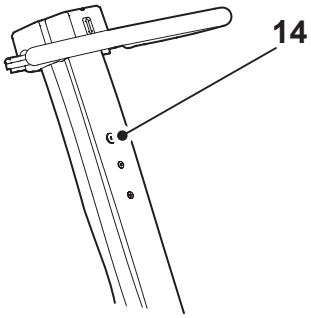

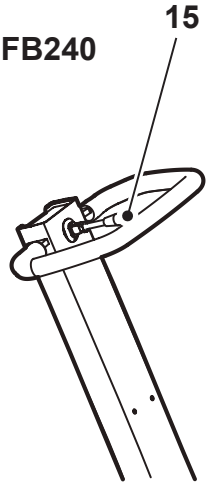

Left side view

1. Cap
2. Yoke
3. Operating lever (forward/reverse lever FB240)
4. Control panel
5. Bottom plate
6. Rubber dampers
7. Vibrating element
8. Belt guard
9. Engine

Right side view

10. Refueling
11. Throttle lever
12. Protective frame
13. Side protection
14. Transport security

Lever view FB240

15. Oil tank

Lever view FB155 / FB240

16. Lever control

Dok: 101536-GB 2039

DAILY SUPERVISION

Fuel Check
Check that there is fuel in the tank. Top up if necessary.

Engine Oil Level Check
Check the oil level in the crankcase every day. The oil must reach the edge of the filling hole when the machine is on a level surface.

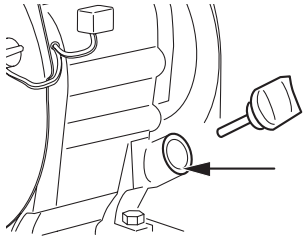

Air Filter Check.
The air filter must be checked at least once every working week. When working in dusty conditions, check daily.

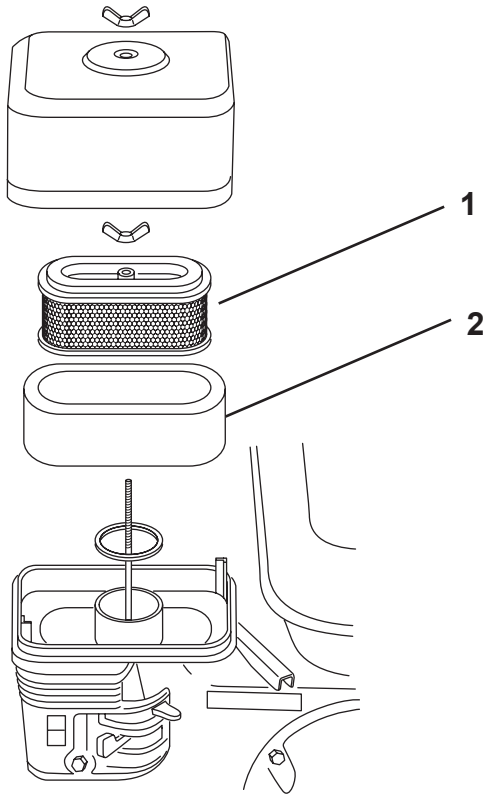

1. Foam plastic element
2. Paper element

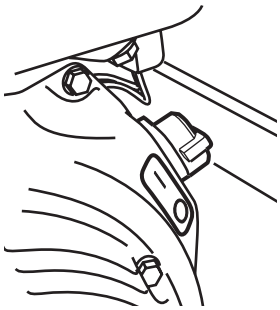

Engine power switch

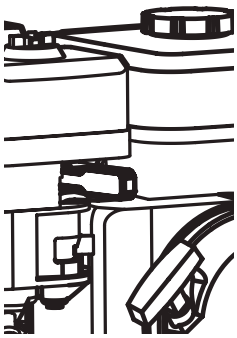

Throttle lever

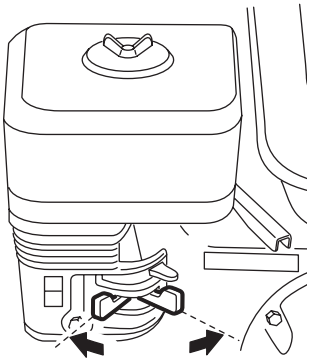

Fuel cock

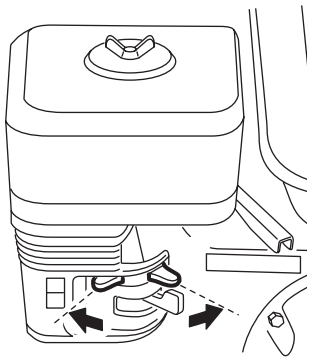

Choke

BEFORE STARTING

See “DAILY SUPERVISION”, page 7.

STARTING

Set the engine power switch to position “1”.

Open the fuel cock.

Set the throttle lever to “MIN” mode.

Adjust the choke. If the engine is cold, close the choke completely. Do not use the choke if the engine is hot or in hot air temperatures.
Start by pulling the starting lever. Pull it first until the mechanism engages, then pull it hard and fast with both hands.

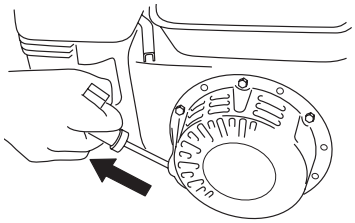

Dok:101536-GB 2039

AFTER STARTING

Switch the throttle lever to idle.

Open the choke gradually.
Run the engine for around 5 minutes.

STOPPING

Switch the engine to idle and let it run for a few minutes.
Switch the engine power switch to “0”.

Close the fuel cock.

V-belt drive

Check the tension and condition of the V-belt regularly. Replace a damaged V-belt with a new type according to the table below.

Machine designation	V-belt type
FB 155	XPA 990
FB 240	XPA 1107

Vibrating element

Check for oil leaks regularly. Seal any leaks. NOTE! the machine must under no circumstances be operated if there are any indications of leakage.
Note! The amount of oil in the vibrating element is**:**
FB155.....**0.19 l**
FB240.....**0,35 l**

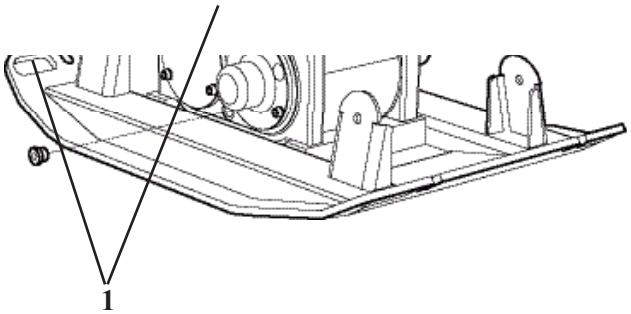

1. Draining / refilling openings

Rubber dampers

Check the condition of the rubber dampers regularly.
Replace damaged dampers.

Dok:101536-GB 2039

DRIVING INSTRUCTIONS

The vibration element of the machine is started when the throttle is applied and when the coupling engages.
At the first start, the machine always moves forward and unless the handle controls have been affected.

The FB155 has a handle to drive the machine and the FB240 has two different handle solutions to drive the machine back and forth.

FB155 / FB240
When the lever between the handle grips is moved backwards, the machine reverses, and when it is moved forwards it moves forwards.

FB240
When the entire handle is moved backwards, the machine reverses, and when it is moved forwards, it moves forwards.
If the operator releases the handle grip while driving, the machine will stop without continuing in any direction.

NOTE! For all types of packing work, the engine must always be run at full throttle to obtain the maximum packing effect of the machine, and not to risk a damaged slip clutch.

FB 240

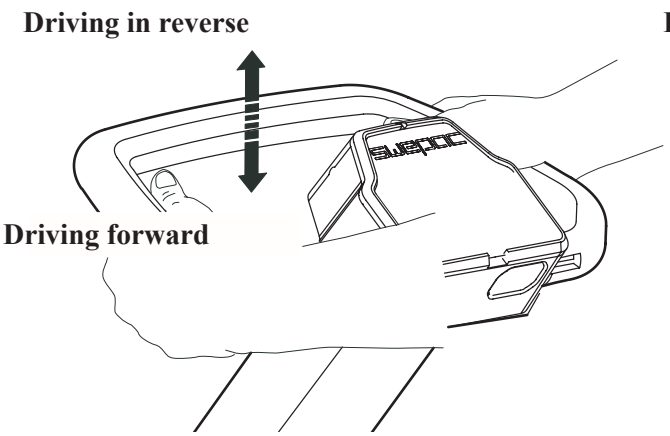

FB155 / FB 240

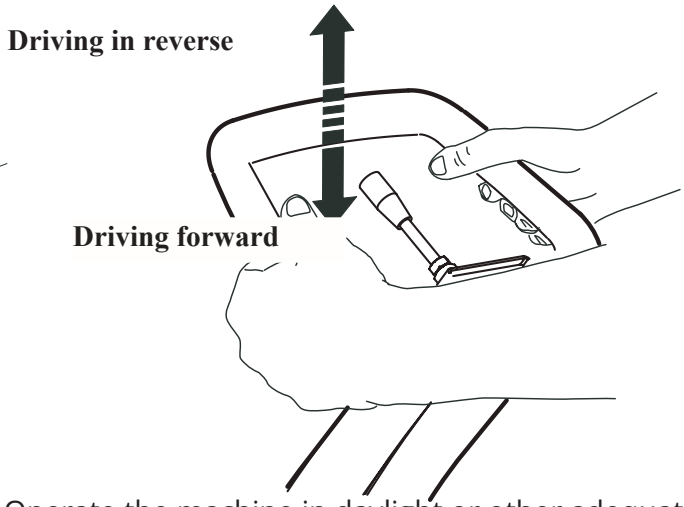

The machine is only intended for outdoor use. Operate the machine in daylight or other adequate lighting. Ballast must be wetted or naturally damp. All other uses are advised against.

Note! When driving uphill, the machine should be driven in reverse.
The machine may not incline more than 20° sideways or during installation.

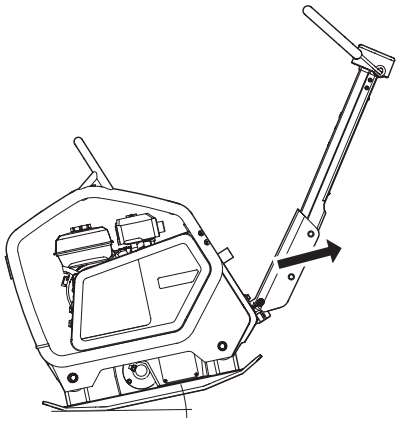

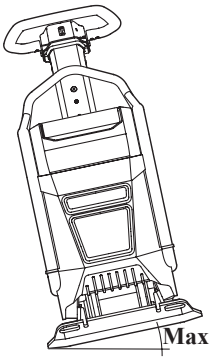

Dok:101536-GB 2039

TRANSPORTATION

The machine has a lifting yoke.

Note! Only use the lifting point (1) of the protective frame when lifting the machine.

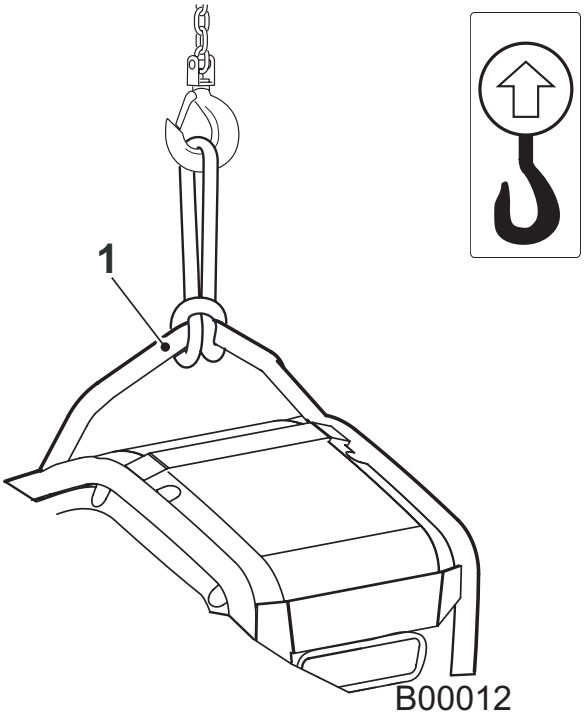

Check before lifting that the lifting yoke and its mounting on the machine are undamaged. Check also that the base plate's rubber dampers are undamaged and firmly attached.

Transport security

For transportation by vehicle, the lever must be in the forward position and secured with, for example, approved straps. Note! Secure it to the lifting yoke on the base plate and not the rubber-cushioned upper part.

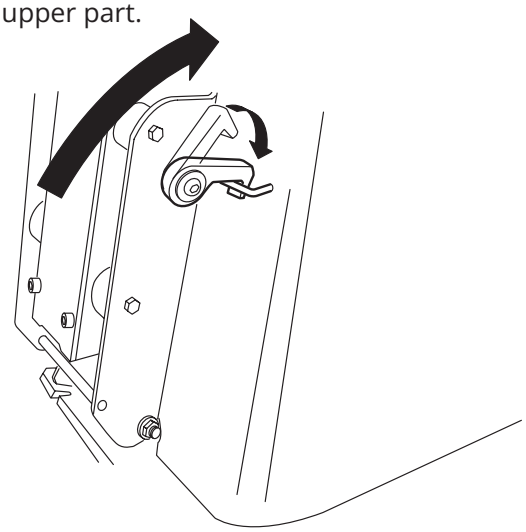

Always secure the machine with a strap as shown in the illustration or the lifting yoke on the base plate during transport.

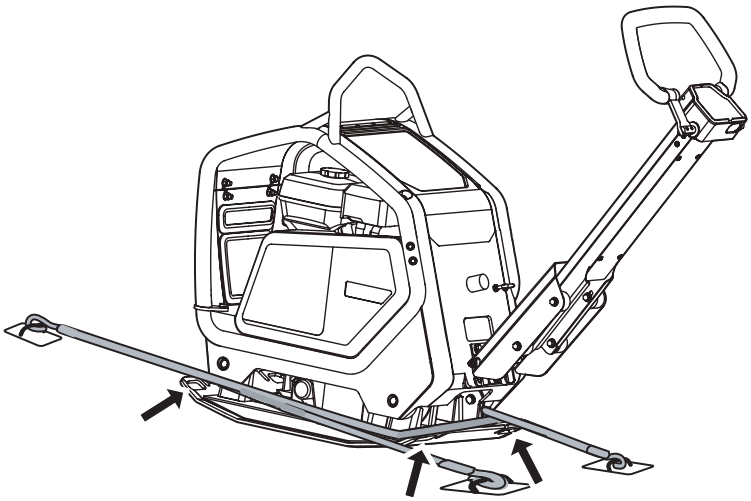

Dok:101536-GB 2039

EC Declaration of Conformity

Manufacturer

Swepac AB
Bergvägen 7
34132 Ljungby

1. Category: Plate compactor

2. Type: FB 155
FB 240

3. Motor power: FB 155.....4.1 kW
FB 240.....4.1 kW

The product complies with the following directives:

2006/42/EC

2000/14/EC

2004/108/EC

EN 500-1

EN 500-4

Technical documentation available from:

Swepac AB, Bergvägen 7 34132 Ljungby SE
Tomas Johansson/Product Engineer

Dok:101536-GB 2039

FOR A SOLID GROUND

Bergvägen 7 | SE-341 32 Ljungby | Sweden • Tel +46 (0)372-156 00 | www.swepac.com